IJAAR PUBLISHING®

Scholarly Journal of Management Sciences Research | ISSN: 2955-0793
Vol. 5, Issue 1 (2026) | www.ijaar.org/sjmsr

DIGITAL HUMAN RESOURCE ANALYTICS AND EMPLOYEE PERFORMANCE OF THE BANKING SECTOR IN SOUTH- SOUTH, NIGERIA

By

Osuagwu, Godwin Onyewuchi (PhD)[1]
E-mail: Osuagwu.godwin@nbu.edu.ng, onyeosuagwu@gmail.com
Tel: +234 8034 4651 33
Department of Accounting
Faculty of Management and Social Sciences,
Nigerian British University, Asa, Abia State

David Alonge, Bosede Olugbenga (PhD)[2]
E-mail: Olugbenga.bosede@nbu.edu.ng; bosedavida@gmail.com
Tel: +234 8037240429
ORCID ID: 0009-0005-0946-2994
Department of Business administration,
Faculty of Management and Social Sciences,
Nigerian British University, Asa, Abia State

ABSTRACT

This study investigates the association between digital human resource analytics and employee performance of the banking sectors in South-South Nigeria. Digital human resource analytics was conceptualized through predictive capability and decision support, while employee performance was measured using task and contextual performance. The population comprises of 2850 employees of selected twenty-one (21) deposit money banks operating across Akwa Ibom, Bayelsa, Cross River, Delta, Edo, and South- South, Nigeria. A sample size of 338 respondents was drawn using the Krejcie and Morgan (1970) table for sample size determination. Simple random sampling technique was used. A structured questionnaire was the instrument for primary data collection. The measurement model was assessed using indicator reliability, internal consistency reliability, convergent validity, and discriminant validity. Data were analysed using Partial Least Squares Structural Equation Modelling (PLS-SEM) with SmartPLS 4. 0. The findings revealed appositive and significant relationships between the dimensions of digital human resource analytics and employee performance. The study concludes digital human resource analytics correlates with employee performance. The study recommends enhancing digital human resource analytics through predictive capability and decision support for effective employee performance.

Keywords: Digital Human Resource Analytics, HR Analytics, Employee Performance, Banking Sector, Human Resource Management

https://www.doi.org/10.46654/vcrnwt22

INTRODUCTION

The banking industry operates in a volatile, dynamic and technology-driven environment that requires the delivery of accurate, efficient and customer-orientated services. Employee performance involves the process of carrying out effective execution of tasks, promoting efficiency at the workplace, and delivering quality service, which is vital in enhancing organisational success, financial stability and sustainability. Efficiency, accuracy and responsiveness are essential in the banking sector, as they influence performance and customer trust (Guest, 2021). It is important for employees to perform their tasks effectively to improve service quality, achieve strategic objectives, and maintain superior customer satisfaction. Employee performance is an important factor that strongly influences the organisational competitiveness, effectiveness, and sustainability of service-orientated organisations (Aguinis, 2021).

Ngalo et al. (2023) posit that high-performing employees contribute significantly to the firm's profitability, productivity, improved service quality, efficiency, and customer satisfaction. Thus, making performance a core element for increasing competitiveness. The rising operational complexity of the banks, driven by technological disruption and regulatory complexities, has progressively heightened the organisation's need for improved employee performance. Hence, it becomes a necessity for banks to integrate technological innovations for improved service delivery, customer satisfaction and operational efficiency. However, the effectiveness of employee tasks and contextual performance lie in the utilisation of these technological tools in role performance. Florence & Eke, (2025) suggest that workplace digital transformation influences employee skill development, efficiency, productivity, and performance outcomes

Digital transformation, automation, and data-driven decision-making have also changed how employee performance is managed. Performance monitoring is becoming more digital, efficient, and evidence based. Traditional human resource practices often failed to use objective facts in decision-making; they rather relied on subjective judgement, which involved making a decision or forming an opinion based on personal feelings or individual perspectives, and these are becoming less effective in proffering solutions to modern workforce challenges. Thus, many organisations now embrace evidence-based approaches that advocate the use of accurate measurement and management of employee performance (Marler & Boudreau, 2017; Tursunbayeva et al., 2021).

Although many organisations have adopted the use of digital transformation and data-driven advancements, some are still finding it difficult to attract employees' best performance; most of them do not utilise data-driven technology and analytics in human resource management. Traditional human resource practices often use files, spreadsheets, and personal judgement instead of automated systems, real-time data, or predictive analytics to give insights into employee engagement, productivity, and development needs. This shortcoming has a negative impact on how decisions are made within the organisation as related to recruitment, training, and performance management in the organisation, thus lowering effectiveness (Minbaeva, 2021; Fernández & Gallardo-Gallardo, 2021).

To tackle these challenges, digital human resource analytics has become the transformative tool for promoting employee performance in modern organisations. Digital human resource analytics involves the use of technology that is purely data-driven and analytical tools that rely on data to gather, analyse, process and interpret information about employees to enhance better and more informed decisions. Thus, promoting the firm's ability to recognise trends in

performance patterns, anticipate and predict employee behaviour, and create specific actions, strategy or interventions that could improve productivity and efficiency (Marler & Boudreau, 2017; Angrave et al., 2020).

According to Minbaeva (2021), data-driven human resource practices help organisations ensure that workforce plans, strategies and actions support the overall business objectives and are goals-driven to achieve better performance outcomes. In the same way, The introduction of digital technologies and financial innovation has brought about stronger competition among the banking sectors. Many modern banks are increasingly making use of digital technology and tools to provide effective service delivery and operational efficiency. Although many have embraced technological adoption, some are still experiencing performance-related challenges such as inefficiencies, low productivity, and inconsistent service delivery. Thus, creating a need for advanced human resource approaches that could leverage analytics to enhance better workforce performance (Adeola & Evans, 2020; Ezenwakwelu et al., 2022).

Several studies have been carried out on digital human resources (Minbaeva, 2021; Fernández & Gallardo-Gallardo, 2021), and employee performance (Guest, Marler & Boudreau, 2017; Tursunbayeva et al., 2021**)** respectively. There is a dearth of empirical study on the influence of digital human resource analytics on employee performance within the banking sector in Nigeria. This gap in knowledge brings about the need to understand how digital human resource analytics influences emerging global markets' employee performance. Hence, the study seeks to investigate the association between digital human resource analytics and employee performance in the banking sector**.**

1.2 Statement of the Problem

Many organisations in the banking sector's employees' outputs are below expectations. Such trends could be observed in their low productivity, inefficiency, poor task execution and inappropriate service delivery. Continuous investment has been made in enhancing human resource management systems and training programmes (McCartney & Fu, 2022); however, this has not improved most firms' employees. And the integration of digital tools in banks has not resulted in improved employee strategic standards and performance (Marler & Boudreau, 2017).

The effectiveness of the banking sector performance heavily relies on the employee's capability, efficiency in executing tasks and their overall performance in ensuring the achievement of the organisational goals. Inefficiency and failure to deliver accurate and timely services in a competitive financial environment could result in reduced customer loyalty and declining customer satisfaction**.** Poor employee performance in the banking sectors could also result in operational inefficiencies and more mistakes (McCartney & Fu, 2022). Increasing error rates increases the service costs, thereby making service delivery pricier and reducing the accrued profitability. According to Tursunbayeva et al. (2018), poor employee performance can negatively harm employee performance, effectiveness, productivity and competitiveness in the service sector, where timeliness and accuracy are paramount.

Poor employee performance could weaken employee motivation, lower organisational engagement, increase employee intentions to leave and increase turnover. When employees are not adequately monitored, helped, supported, or guided with data-driven insights, they are

less likely to demonstrate commitment to organisational goals, hence resulting in a weak culture, inadequate innovation, proactiveness and inability to adapt to changes in technology and the new market trends. Although several interventions have been made to reduce poor employee performance through traditional human resource practices, such as performance appraisal systems, training, effective recruitment processes, and reward systems. But these traditional methods are often manual, lacking real-time integration, and are poorly integrated across systems. Consequently, poor employee performance continues, suggesting that conventional human resource approaches are inadequate in an increasingly digital banking environment; hence, the need to explain how digital human resource analytics can offer a strategic solution that could be used to address the poor employee performance in the banking sector, make decisions and improve employee performance by connecting data about the workforce to the goals of the organisation.

Aim and Objectives of the Study

The aim of this study is to examine the relationship between digital human resource analytics and employee performance of banking sector in South- South, Nigeria. The specific objectives are to:

i. Explore the relationship between predictive capability and task performance of the banking sector in South- South, Nigeria.
ii. Determine the link between predictive capability and contextual performance of the banking sector in South- South, Nigeria.
iii. Assess the bond between decision support and task performance of the banking sector in South- South, Nigeria.
iv. Investigate the association between decision support and contextual performance of the banking sector in South- South, Nigeria.

Research Questions

The following research questions were given in the study:

i. What is the association between predictive capability and task performance of the banking sector in South- South, Nigeria?
ii. How does predictive capability relate to the contextual performance of the banking sector in South- South, Nigeria
iii. How does decision support relate to the task performance of the banking sector in South- South, Nigeria?
iv. What is the linkage between decision support and contextual performance of the banking sector in South- South, Nigeria?

Research Hypotheses

The following research hypotheses were stated and tested in this study.

H_{o1}: There is no significant relationship between predictive capability and task performance of the banking sector in South- South, Nigeria.

H_{o2}: There is no significant relationship between decision support and task performance of the banking sector in South- South, Nigeria.

H_{o3}: There is no significant relationship between predictive capability and contextual performance of the banking sector in South- South, Nigeria.

H_{o4}: There is no significant relationship between decision support and contextual performance of the banking sector in South- South, Nigeria.

DIGITAL HUMAN RESOURCE ANALYTICS

Digital human resource analytics (DHRA) is an organised strategic usage improved digital technologies, data analytics systems and platform, and sound statistical techniques to gather, process, and interpret employee data. These tools usage should be aligned with the processes, objectives, goals and expected outcomes of the organisation (Minbaeva, 2021) for improved data decisions. DHRA has progressed from use of fundamental traditional HR metrics to advanced analytics techniques that allow entities to optimise strategies, forecast future trends, recognise, workforce patterns, and enhance human capital management. According to Tursunbayeva et al. (2021, the integration of digital technologies, such as cloud-based HR systems, artificial intelligence and machine learning, improved organisations' capacity to derive actionable insights from workforce data. DHRA turn HR into a data-driven function that aligns HR practices the firms. The use of analysis has improved firms' efficiency in recruitment processes Marler & Boudreau, 2017, employee engagement and empowering of interventions that improve performance outcomes, hence providing the analytical foundation needed to improve workforce efficiency and effectiveness. Adopting HR analytics can improve better decisions and do better overall organizational performance (McCartney et al., 2021).

PREDICTIVE CAPABILITY

Predictive capability is a firm's ability to leverage historical and real-time data to predict future workforce trends, outputs and results (Levenson, 2020). Predictive capability empowers the organizations to anticipate the workforce behaviour, identify future potential performance barriers, and proactively take initiative actions that would address the challenges being faces by the employees. When an organisation leverages predictive models, they can proactively forecast performance levels, training needs and turnover, thereby strengthening effective strategic workforce planning (Margherita, 2022). Furthermore, its proactive, timely decision enabler enhances organizational agility as predictive preventive strategies will improve performance outcomes, enable efficient recognition of employees with good performers and detect disengagement which could lead to intention to quit, thus optimize talent management practices.

DECISION SUPPORT

Decision support involves the utilisation of analytical tools and evidence data-based insights for managerial decisions (Angrave et al., 2020). Real-time data and information are used by the management to promote the quality, accuracy, speed, and effectiveness of decision-making. These frameworks harmonize data from diverse human resource functions to make evidence-based decisions regarding hiring, career development and performance management (Tursunbayeva et al., 2021). Decision support strengthens organizational productivity and enhances perception-based reasoning and individual assessment, thereby reducing reliance on intuition and subjective judgment in human resource activities decisions. Data-driven decision support enhances efficient allocation of resources, effective recognition of gaps in performance, and it is used in enhancing and implementing targeted interventions (McCartney et al., 2021). Decision support systems align HR decisions with strategic objectives and organizational goals to lighten workforce management stress. Minbaeva (2021) opine that firms utilizing HR analytics for decision support experience improved workforce productivity and efficiency in performance outcomes

EMPLOYEE PERFORMANCE

Employee performance is executing roles effectively and efficiently to realise the organisational goals and objectives (Aguinis, 2021). Performance involves task-related functions, and wider behavioural patterns drive competencies, efficiency and outcomes. Employee performance is essential for achieving business operational efficiency, delivering quality service, maintaining organisational reputation, competitive advantage and customer satisfaction in service-driven industries, of which the banking sector is one (DeNisi & Smith, 2020). Employee performance is influenced by a combination of organisational and individual factors that interact to influence how a person carries out their roles.

The organisational factors, which include leadership styles, organisational culture, technology and resources, reward and compensation systems, training and development, work environment and management practices, interact to determine how effectively employees carry out their job roles. The individual factors, on the other hand, relate to personal attributes and internal drivers of employees such as health and well-being, motivation, attitude, personality, skills, competence and job satisfaction. The interaction of the individual characteristics and organisational environment determines the employee's performance (Guest, 2021). Hence, organisations are increasingly recognising the importance of adopting data-driven approaches to managing and improving employee performance. The firms need to leverage digital tools and analytics to monitor performance to systematically track, measure, and evaluate employees' work outcomes, identify improvement areas, and design effective performance management systems (Budhwar et al., 2022).

TASK PERFORMANCE

Task performance refers to employee's ability to meet their job roles and expectations, and the accuracy and efficiency put in completing tasks to achieve the organizational goals (Akhigbe David Alonge, 2024). Employees are expected to perform their assigned responsibilities, execution the duties specified in their job descriptions with accuracy, speed and efficiency, to ensure the best quality of work output. Task performance is a key indicator of individual performance, productivity and overall organizational efficiency and effectiveness Aguinis, 2021). The outcome of performance in every firm is influences by the employee skills, the training given for career progression, and the employees access to relevant resources that could upgrade their capabilities (DeNisi & Smith, 2020). These brings about the necessity to integrate digital HR analytics in order for organizations to have better assessment of the employee task performance by analysing real-time data on employee output and efficiency. Using digital human resource analytics will promote quick identification of performance gaps by the managers and enhancing implementation of targeted proactive interventions to improve productivity. According to Budhwar et al., (2022) when businesses services and processes are monitored, there would be efficiency in the management of task, better service quality and improved.

CONTEXTUAL PERFORMANCE

Contextual performance is the voluntary actions or behaviours exhibited by workers in the organisation which could result in improved psychological and social environment (Guest, 2021). Task performance has to do with manners of executing job roles, but contextual performance differs as it involves the behavioural patterns exhibited at the workplace. The behaviours involve organisational citizenship behaviour such as mutual cooperation, teamwork, and the staff's willingness to go beyond formal job requirements. Employee

behaviour at workplace influences their effectiveness and positive work environment (Koopmans et al., 2021; Contextual performance is becoming more widely accepted, valued and seen as a key element of improved performance. Cohesion, adaptability, and innovation is often attributed to high level of contextual performance (Sharma & Sharma, 2023). Organisational digital human resource analytics promote contextual behaviours, given insights into employee engagement levels, interactions, and collaborative efforts.

RESOURCE-BASED VIEW (RBV)

The Resource-Based View(RBV) offers a valid, strong theoretical framework of ideas for investigating the association between digital human resource analytics and employee performance. RBV suggests that superior performance that promotes higher customer satisfaction, efficiency, loyalty, profitability, innovation and market share could be achieved in an organisation when the firm is able to effectively deploy resources that are valuable, rare, inimitable and non-substitutable (Barney, 1991). Hence, organisational resources and capabilities, such as digital human resource analytics, are elements that determine the effectiveness and outcomes of employee performance and competitive advantage. Digital HR leverages employee data to enhance consistency, improve decision-making and optimise productivity. Optimisation of resources occurs when human resource raw data is translated into actionable strategies that enable behaviour and daily activities to support organisational goals and performance outcomes (Becker & Huselid, 1998). RBV also suggests that performance goes beyond mere ownership of technological devices that drives performance is the capability to manage, integrate, and use the provided tools effectively. When processes are incorporated with digital human resource analytics systems, it enhances effective, competitive talent management. When organisations take advantage of human resource analytics that support data-driven decision-making and continuous performance improvement, it results in employee efficiency and organisational effectiveness (Marler & Boudreau, 2017).

Empirical Review

Okoro (2024) investigates the association between digital human resource practices and employee development in Nigerian banking sector. Digital recruitment and digital onboarding were used as the dimensions of digital human resource practice while performance management and competence development were used as the measures of employee development. Information used in the study were sourced based on authoritative and credible print encyclopedias, nonfiction books, academic journals. and dictionaries. The findings from the extant empirical studies, shows that digital human resource practice is essential to employee development in the banking sector. The study concludes that adopting digital HR practices, improve employee training and development, engagement, enhance efficient recruitment processes, and promote retention of top talent.

Dayananda and Anuja (2026) examine the influence of digital human resource practices on employee development, Digital Recruitment and Digital Onboarding, was used as the dimension of digital human resource practices while employee development was measured with Performance Management and Competence Development. Quantitative design was employed in the study. Data was collected from 229 employees across five major banks using a stratified random sampling technique. A structured questionnaire was used for data collection, Descriptive analysis, and multiple regression, were applied to test the hypotheses. The findings reveal that DHRPs significantly correlates with employee development, with both digital recruitment and onboarding significantly relates to performance management and competence development. These results imply that the effectiveness in the execution of

digital HR practices promotes skills development, confidence and motivate the employee for effective performance;

Akpodiete (2024) assesses diagnostic resource analytics and employee commitment in deposit money banks in South-South, Nigeria. The study adopted a correlational survey research design. The sample size comprises two hundred and sixty respondents drawn from a population of seven hundred and forty-eight staff of the regional offices of the twenty-four deposit money banks in South-South, Nigeria, the sample size was determined using Taro Yamen formular. Data was collected using structured questionnaire. Face and content validity was used. The reliability was determined with Cronbach's Alpha. The Spearman's Rank Order Correlation was employed to test the hypothesis with the aid of SPSS 23.0. The findings revealed that diagnostics human resource analytics correlates with the measures of employee commitment.

METHODOLOGY

This study investigates the association between digital human resource analytics and employee performance of the banking sectors in, South-South Nigeria. Digital human resource analytics was conceptualized through predictive capability and decision support, while employee performance was measured using task performance and conceptual performance. The population comprises of 2850 employees of selected twenty-one (21) deposit money banks operating across Akwa Ibom, Bayelsa, Cross River, Delta, Edo, and South- South, Nigeria. The A sample size of 338 respondents was drawn using the Krejcie and Morgan (1970) table for sample size determination. Simple random sampling technique was used. A structured questionnaire was the instrument for primary data collection. Data were analysed using Partial Least Squares Structural Equation Modelling (PLS-SEM) with SmartPLS 4.0.

RESULTS AND DISCUSSION

Questionnaire Distribution and Retrieval

A total of 338 copies of questionnaire were distributed to respondents. Out of this number, 321 copies representing 94.9% were retrieved. However, after data screening and cleaning procedures, 312 copies representing 92.3% were found usable for the final analysis, while 9 copies representing 2.6% were rejected due to incomplete responses and inconsistencies. The measurement model was assessed using indicator reliability, internal consistency reliability, convergent validity, and discriminant validity.

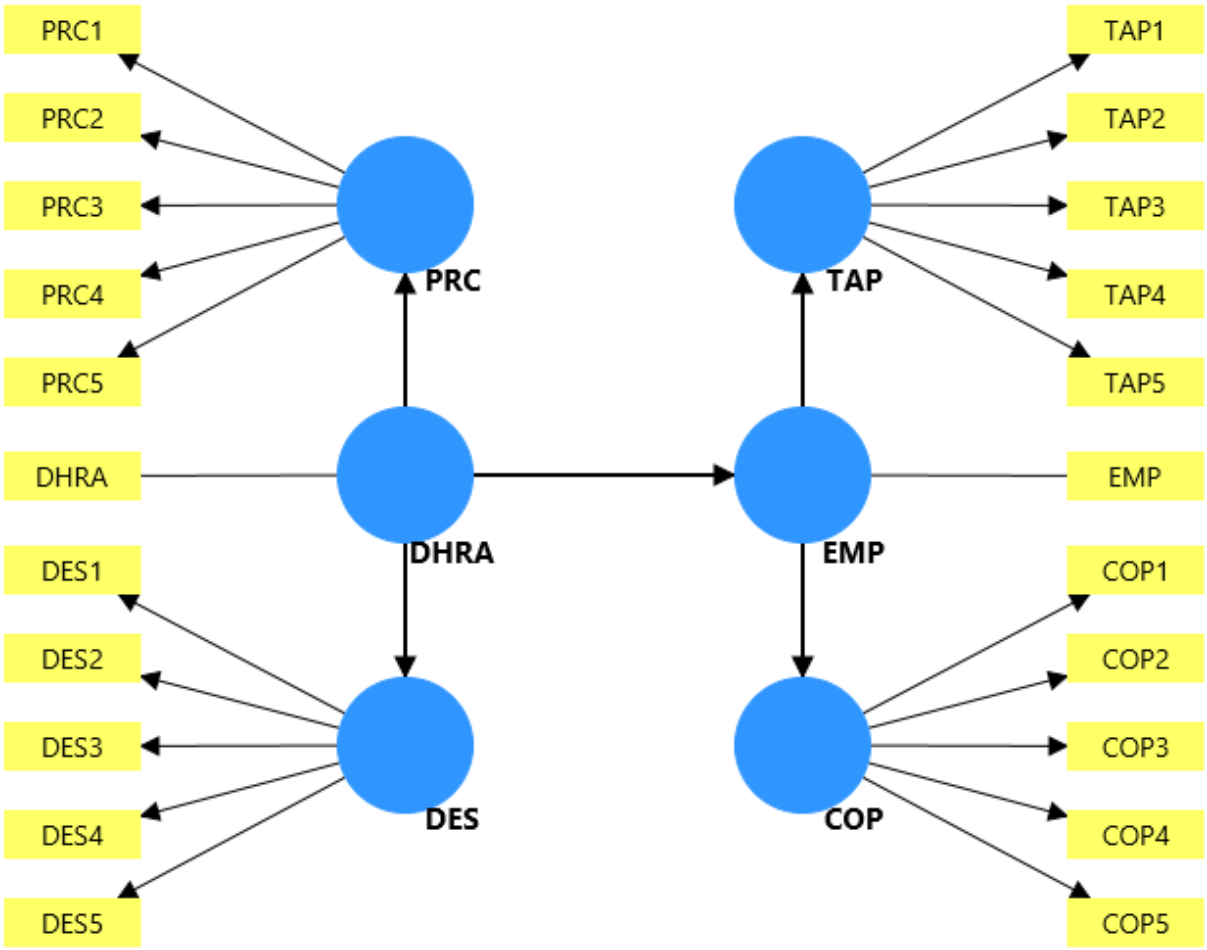

Figure 1: Research Model

Figure 1 presents the proposed research model linking digital human resource analytics to employee performance outcomes in the banking sector of South-South Nigeria. The model specifies that Predictive Capability (PRC) and Decision Support (DES) represent core dimensions of digital HR analytics, which are hypothesized to influence employee performance. Task Performance (TAP) and Contextual Performance (COP) serve as the outcome variables, reflecting both the technical and behavioural aspects of employee effectiveness.

Table 1: Reliability Test

	Cronbach's Alpha	Composite Reliability
Predictive Capability (PRC)	0.836	0.838
Decision Support (DES)	0.895	0.896
Task Performance (TAP)	0.881	0.892
Contextual Performance (COP)	0.807	0.841

Table1 shows the reliability and convergent validity statistics of the study constructs. The Cronbach's Alpha values exceed the recommended threshold of 0.70, thereby confirming internal consistency reliability. Similarly, the Composite Reliability values exceed 0.70 threshold, indicating strong construct reliability.

Table 2: Validity Test

	AVE	COP	DES	PRC	TAP
COP	0.584	**0.764**			
DES	0.705	0.261	**0.840**		
PRC	0.606	0.404	0.287	**0.778**	
TAP	0.675	0.342	0.291	0.371	**0.821**

The result in Table 2 the Average Variance Extracted (AVE) values ranged from 0.695 to 0.745, which are above the recommended minimum value of 0.50. This confirms adequate convergent validity of the constructs. The square root of the AVE values for each construct was greater than the correlation values among other constructs. This satisfies the Fornell-Larcker criterion and confirms the establishment of discriminant validity among the study constructs.

Hypotheses Testing

The hypotheses were tested using Partial Least Squares Structural Equation Modelling (PLS-SEM) with SmartPLS 4.0. The decision rule states that where the p-value is less than 0.05 and the t-statistic exceeds 1.96, the null hypothesis should be rejected.

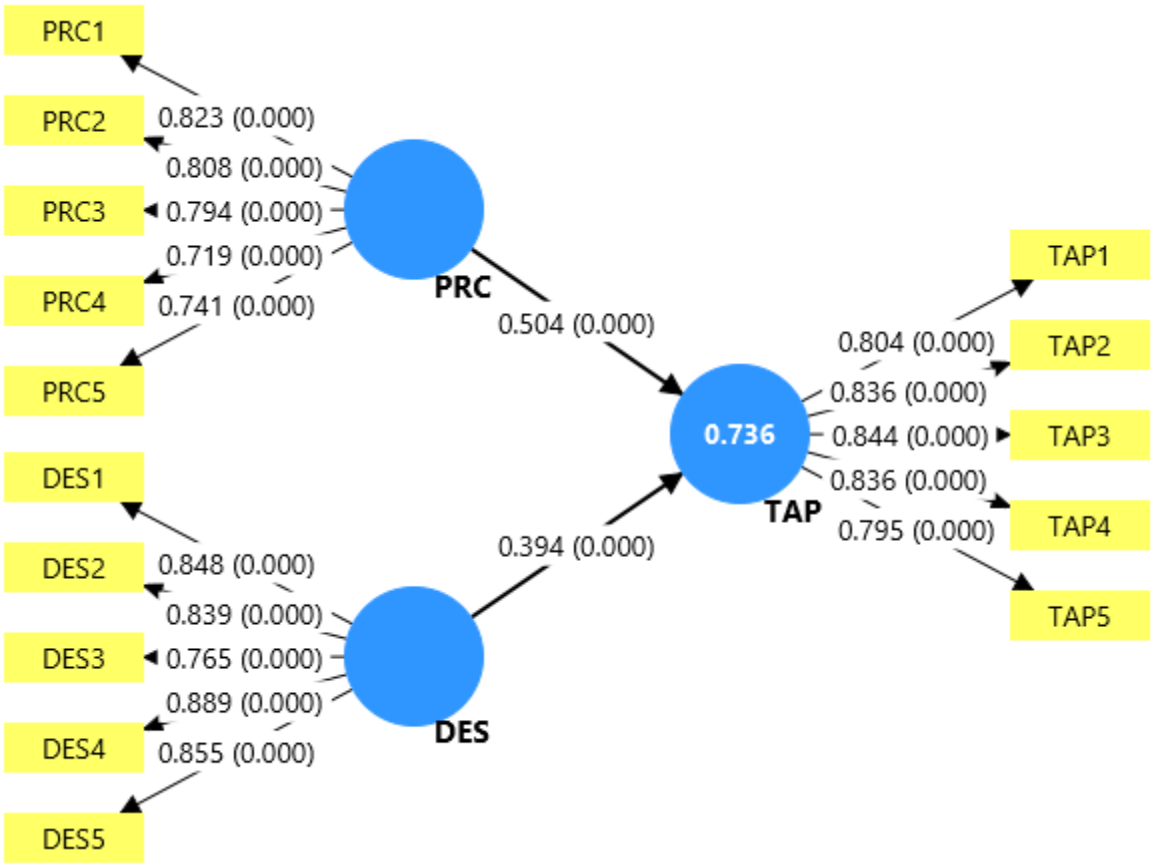

Figure 2: Hypotheses 1 and 2

H_{o1}: There is no significant relationship between predictive capability and task performance of the banking sector in South- South, Nigeria.

H_{o2}: There is no significant relationship between decision support and task performance of the banking sector in South- South, Nigeria.

Figure 2 presents the structural equation model used to test Hypotheses 1 and 2. The standardized path coefficient from Predictive Capability (PRC) to Task Performance (TAP) was β = 0.504, t = 5.929, p = 0.000, indicating a strong and statistically significant positive relationship. This result leads to the rejection of Ho_1, confirming that predictive capability significantly enhances task performance in the banking sector of South-South Nigeria. Similarly, the path from Decision Support (DES) to Task Performance (TAP) was β = 0.394, t = 4.124, p = 0.000, also statistically significant. Thus, Ho_2 is rejected, demonstrating that effective decision support contributes positively to employees' task performance. The model explains 73.6% of the variance in task performance (R^2 = 0.736), underscoring the substantial predictive power of digital human resource analytics in shaping employee outcomes. Collectively, these findings highlight that both predictive capability and decision support are critical dimensions of digital HR analytics that drive efficiency and effectiveness in banking operations.

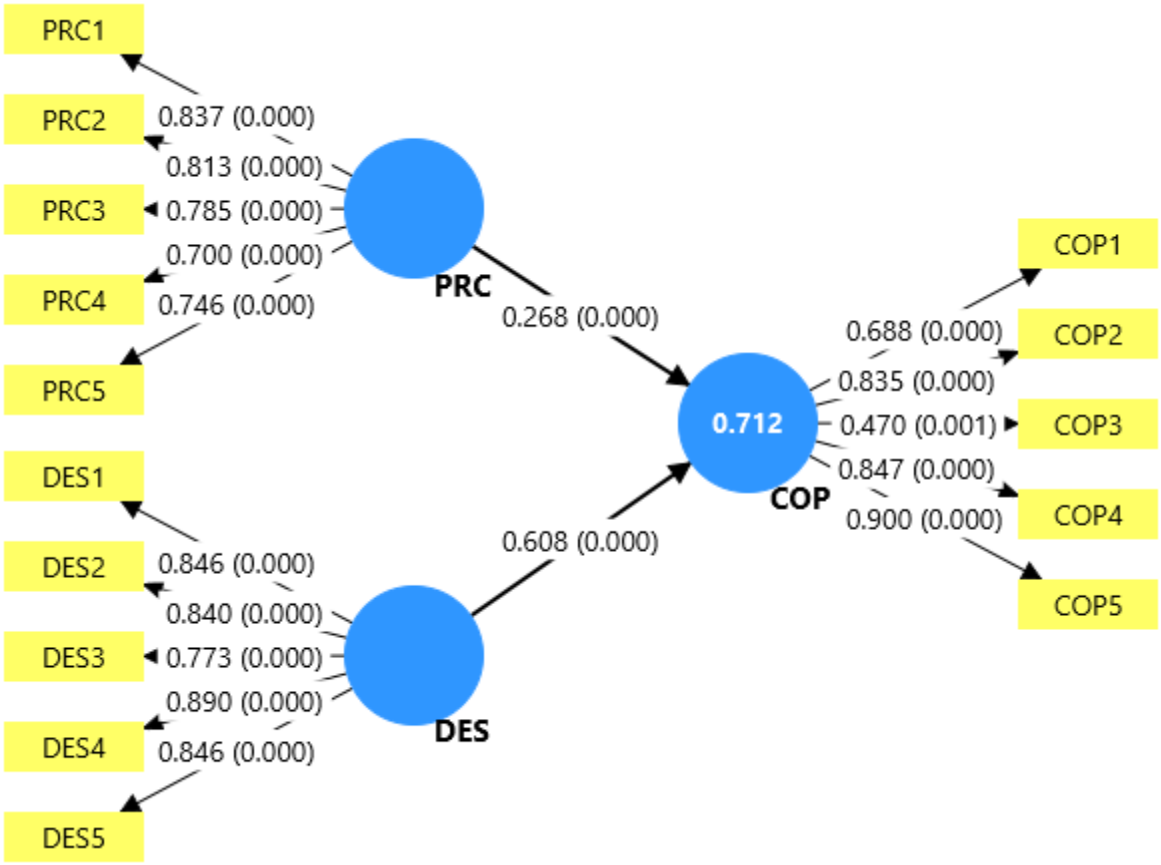

Figure 3: Hypotheses 3 and 4

Ho_3: There is no significant relationship between predictive capability and contextual performance of the banking sector in South- South, Nigeria.

Ho_4: There is no significant relationship between decision support and contextual performance of the banking sector in South- South, Nigeria.

Figure 3 illustrates the structural equation model used to test Hypotheses 3 and 4. The standardized path coefficient from Predictive Capability (PRC) to Contextual Performance (COP) was β = 0.268, t = 3.946, p = 0.000, indicating a statistically significant positive relationship. This result leads to the rejection of Ho_3, confirming that predictive capability significantly enhances contextual performance in the banking sector of South-South Nigeria.

Similarly, the path from Decision Support (DES) to Contextual Performance (COP) was $\beta = 0.608$, $t = 6.747$, $p = 0.000$, also statistically significant. Thus, Ho_4 is rejected, demonstrating that decision support strongly contributes to employees' contextual performance, such as cooperation, adaptability, and organizational citizenship behaviours. The model explains 71.2% of the variance in contextual performance ($R^2 = 0.712$), underscoring the substantial explanatory power of digital HR analytics in shaping employee behaviour beyond task-related outcomes. Collectively, these findings highlight that predictive capability and decision support are essential dimensions of HR analytics that foster both technical and behavioural aspects of employee performance in the banking sector.

Discussion of Findings

Predictive Capability and Task Performance

The findings revealed a statistically significant positive relationship between predictive capability and task performance, with $\beta = 0.504$, $t = 5.929$, $p = 0.000$. This indicates that predictive capability, as a dimension of digital HR analytics, strongly enhances employees' ability to execute tasks effectively. This result aligns with Okoro (2024), who emphasized that digital HR practices improve employee training, engagement, and retention, thereby strengthening task-related outcomes. Similarly, Dayananda and Anuja (2026) found that digital recruitment and onboarding significantly relate to performance management and competence development, suggesting that predictive analytics embedded in HR systems can forecast employee needs and improve task efficiency. Thus, the present study confirms that predictive capability is a critical driver of task performance in the banking sector.

Decision Support and Task Performance

The results showed a significant positive relationship between decision support and task performance, with $\beta = 0.394$, $t = 4.124$, $p = 0.000$. This demonstrates that decision support systems within digital HR analytics contribute meaningfully to employees' ability to perform tasks. This finding resonates with Dayananda and Anuja (2026), who reported that effective digital HR practices promote skills development and motivate employees for improved performance. By providing managers with timely insights and structured decision-making tools, digital HR analytics ensures that employees receive the necessary support to carry out their responsibilities efficiently. The present study therefore reinforces the empirical evidence that decision support enhances employee task performance by reducing uncertainty and improving resource allocation.

Predictive Capability and Contextual Performance

The relationship between predictive capability and contextual performance was significant, with $\beta = 0.268$, $t = 3.946$, $p = 0.000$. This suggests that predictive analytics not only improves technical task execution but also fosters contextual behaviours such as cooperation, adaptability, and organizational citizenship. This finding aligns with Akpodiete (2024), who demonstrated that diagnostic HR analytics correlates with employee commitment in Nigerian banks. Predictive capability allows organizations to anticipate employee needs and align HR strategies with broader organizational goals, thereby encouraging employees to engage in supportive and discretionary behaviours. The present study extends this evidence by showing that predictive analytics contributes to contextual performance, strengthening the social and cooperative dimensions of employee effectiveness.

Decision Support and Contextual Performance

The strongest effect was observed between decision support and contextual performance, with $\beta = 0.608$, $t = 6.747$, $p = 0.000$. This indicates that decision support systems significantly

enhance employees' contextual behaviours, including teamwork, adaptability, and organizational citizenship. This finding corroborates Okoro (2024), who concluded that adopting digital HR practices improves employee engagement and retention, both of which are closely tied to contextual performance. Similarly, Dayananda and Anuja (2026) highlighted that digital HR practices promote confidence and motivation, which translate into cooperative behaviours. The present study confirms that decision support is a vital mechanism for fostering contextual performance, as it empowers employees with clarity, guidance, and confidence to engage in behaviours that go beyond formal job requirements.

Conclusion

The study assesses the relationship between digital human resource analytics and employee performance of the banking sectors in South-South Nigeria. The predictor variable (digital human resource analytics) dimensions are predictive capability and decision support, while employee performance (criterion variable) was measured using task and contextual performance. The hypothesis was tested using Partial Least Squares Structural Equation Modelling (PLS-SEM) with SmartPLS 4.0. The findings revealed appositive and significant relationships between the dimensions of digital human resource analytics and employee performance. The study concludes digital human resource analytics correlates with employee performance.

Recommendations

1. ` Predictive capability through the use of artificial intelligence systems, advanced data analytics, and digital forecasting tools that can accurately predict market trends, customer behaviour, and operational risks to improve efficiency and make informed decisions should be used for employee task performance within the banking sector.

2. Predictive capability should be integrated into customer service delivery, employee relationship management, and teamwork processes to improve contextual performance and help employees anticipate customer needs, resolve issues proactively, and support colleagues effectively.

4. Effective decision support systems that provide timely, accurate, and relevant information for operational and strategic activities should be invested in by the banks for efficiency and accuracy in task performance.

5. The banks should promote the usage of decision support technologies that can enhance operational efficiency; facilitate teamwork, problem-solving, foster collaboration, communication, and employee engagement

REFERENCES

Adeola, O., & Evans, O. (2020). Digital finance, financial inclusion and economic growth: Evidence from Africa. *Journal of Public Affairs, 20*(3), e2209. https://doi.org/10.1002/pa.2209

Adias, L. (2025). Digital Human Resource Management Transformation in Nigeria: Impacts on Talent, Performance, and Workforce Well-being. *Scientific Journal of Technology Management, Information and Artificial Intelligence*, *1*(1), 75-95.

Adias, L. T. (2025). From manual to smart: Assessing the impact of digital transformation on human resource systems in Nigeria's formal sector. *JMIR Preprints*.

Aguinis, H. (2021). *Performance management* (4th ed.). Chicago Business Press.

Akhigbe E. and David Alonge B. O (2024). Leadership intelligence and task performance of Nigerian Police Force in South- South, Nigeria**.** Int. J. Manage. Sci. and Bus. Admin. ISSN: ISSN 2276-7118 (Online) & Open Access. Vol. 3(1): Pp 1-9, January-June 2024.

Akpodiete, M. O. (2024). diagnostic human resource analytics and employee commitment in deposit money banks in south-south, nigeria. *diagnostic human resource analytics and employee commitment in deposit money banks in South-South, Nigeria*.

Angrave, D., Charlwood, A., Kirkpatrick, I., Lawrence, M., & Stuart, M. (2020). HR and analytics: Why HR is set to fail the big data challenge. *Human Resource Management Journal, 30*(3), 381–397. https://doi.org/10.1111/1748-8583.12203

Barney, J. (1991). Firm resources and sustained competitive advantage. *Journal of management*, *17*(1), 99-120.

Becker, B. E., & Huselid, M. A. (1998). Human resources strategies, complementarities, and firm performance. *SUNY Buffalo: Unpublished manuscript*.

Budhwar, P., Malik, A., De Silva, M. T., & Patel, C. (2022). Developments in human resource management in emerging economies. *Human Resource Management Review, 32*(1), 100860.

Dayananda H.H.R.N. Anuja R (2026). The Impact of Digital Human Resource Practices on Employee Development in the Banking Sector in Sri Lanka International research Journal and Innovation in Social Sciences. X(Xiv), 110-120. https://doi.org/10.47772/IJRISS.2026.1014MG0010

DeNisi, A., & Smith, C. E. (2020). Performance appraisal, performance management, and firm-level performance. *Academy of Management Annals*, *14*(1), 1–31. https://doi.org/10.5465/annals.2018.0090

Ezenwakwelu, C. A., Okeke, M. N., & Nwankwo, F. (2022). Digital transformation and performance of banks in Nigeria. *African Journal of Economic and Management Studies*, *13*(2), 1–15.

Falletta, S. (2020). In search of HR analytics. *People + Strategy, 43*(1), 34–40.

Fernández, V., & Gallardo-Gallardo, E. (2021). Human capital analytics and talent management. *Journal of Organizational Effectiveness, 8*(2), 123–140.

Florence, K., & Eke, G. J. (2025). Digital technology and the changing nature of the workplace on performance effectiveness in the banking sector. *International Journal of Economics and Business Management Research*. https://doi.org/10.64137/31079423/IJEBMR-V1I2P105

Guest, D. E. (2021). Human resource management and employee well-being. *Human Resource Management Journal, 31*(1), 22–38. https://doi.org/10.1111/1748-8583.12345

Guest, D. E. (2021). Human resource management and employee well-being: Towards a new analytic framework. *Human Resource Management Journal, 31*(1), 22–38. https://doi.org/10.1111/1748-8583.12345

Koopmans, L., Bernaards, C., Hildebrandt, V., Schaufeli, W., De Vet, H., & Van der Beek, A. (2021). Measuring individual work performance. *Journal of Occupational and Environmental Medicine, 63*(6), e426–e437.

Levenson, A. (2020). Using workforce analytics to improve strategy execution. *Human Resource Management, 59*(5), 509–525.

Margherita, A. (2022). Human resources analytics: A systematization of research topics and directions. *Human Resource Development Review, 21*(2), 189–218.

Marler, J. H., & Boudreau, J. W. (2017). HR analytics: An evidence-based review. *The International Journal of Human Resource Management, 28*(1), 3–26.

McCartney, S., & Fu, N. (2022). Bridging the gap: Why, how and when HR analytics can impact organizational performance. *Management Decision, 60*(13), 25–47.

McCartney, S., Murphy, C., & McCarthy, J. (2021). 21st century HR: A competency model for HR analytics. *European Management Journal, 39*(6), 706–716.

Minbaeva, D. (2018). Building credible human capital analytics for organizational competitive advantage. *Human Resource Management, 57*(3), 701–713.

Minbaeva, D. (2021). Human resource management in the digital age. *Human Resource Management Review, 31*(1), 100820. https://doi.org/10.1016/j.hrmr.2020.100820

Ngalo, M. M., Ogohi, C., & Ibrahim, U. A. (2023). Workplace diversity and employee performance: An empirical analysis of Nigeria's banking sector. *Journal of Human Resource and Sustainability Studies, 11*(1), 211–233. https://doi.org/10.4236/jhrss.2023.111014

Ohwojero, K. O., Eromafuru, E. G., & Obaro, V. C. (2024). Human resource analytics and performance of deposit money banks. *International Research Journal of*

Multidisciplinary Scope, *5*(4), 452–462. https://doi.org/10.47857/irjms.2024.05i04.01635

Okoro, G. O. (2024). Digital human resource practices and employee development in Nigerian banking sector. *BW Academic Journal*, 16-16.

Sharma, A., & Sharma, T. (2023). HR analytics and organizational performance. *Journal of Organizational Effectiveness, 10*(1), 45–60.

Tursunbayeva, A., Di Lauro, S., & Pagliari, C. (2021). People analytics—A scoping review. *International Journal of Information Management, 56*, 102262. https://doi.org/10.1016/j.ijinfomgt.2020.102262